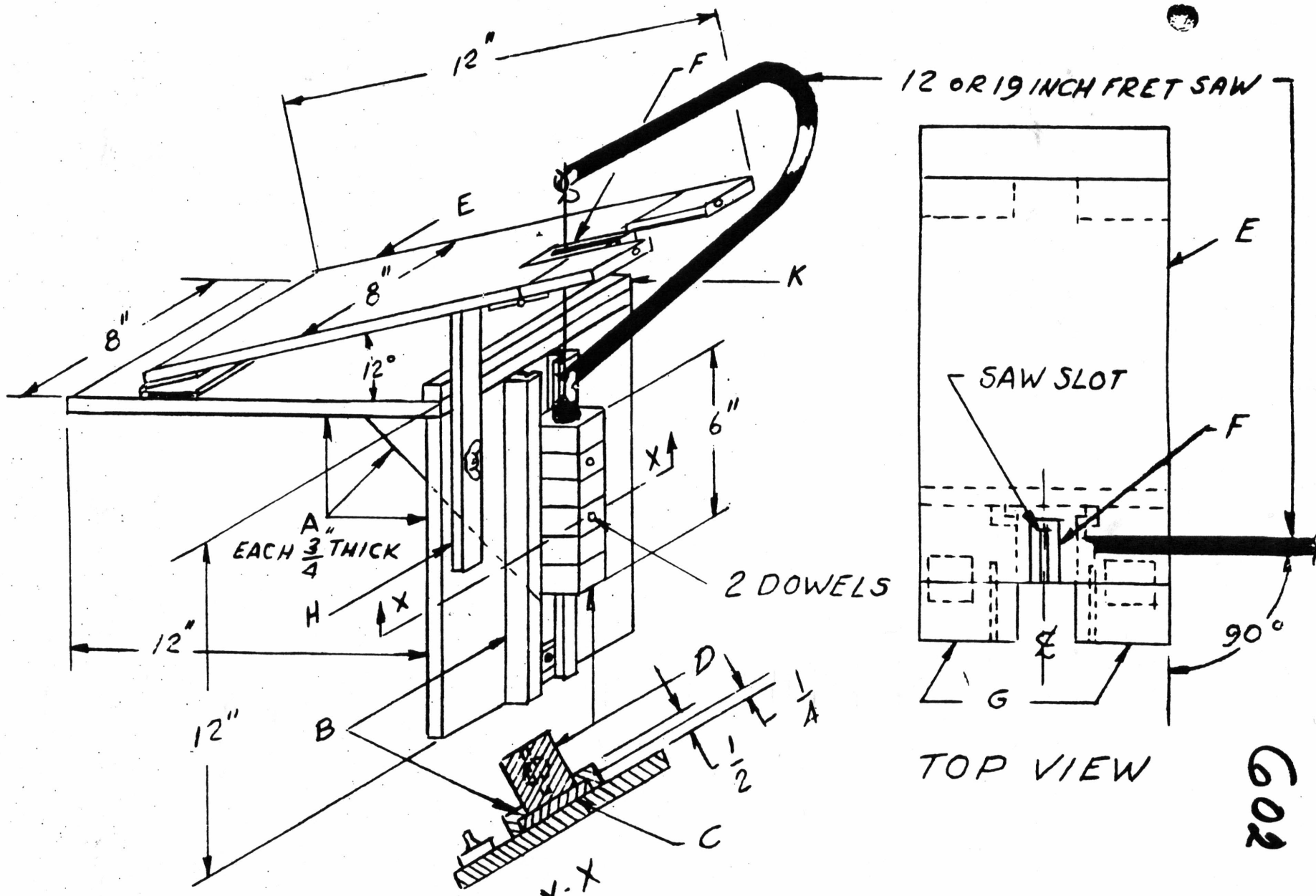

602

FRET SAW AND ANGLE GUIDE FOR MARQUETRY